Current part is item (6) on diagram. Available at www.oshkoshequipment.com

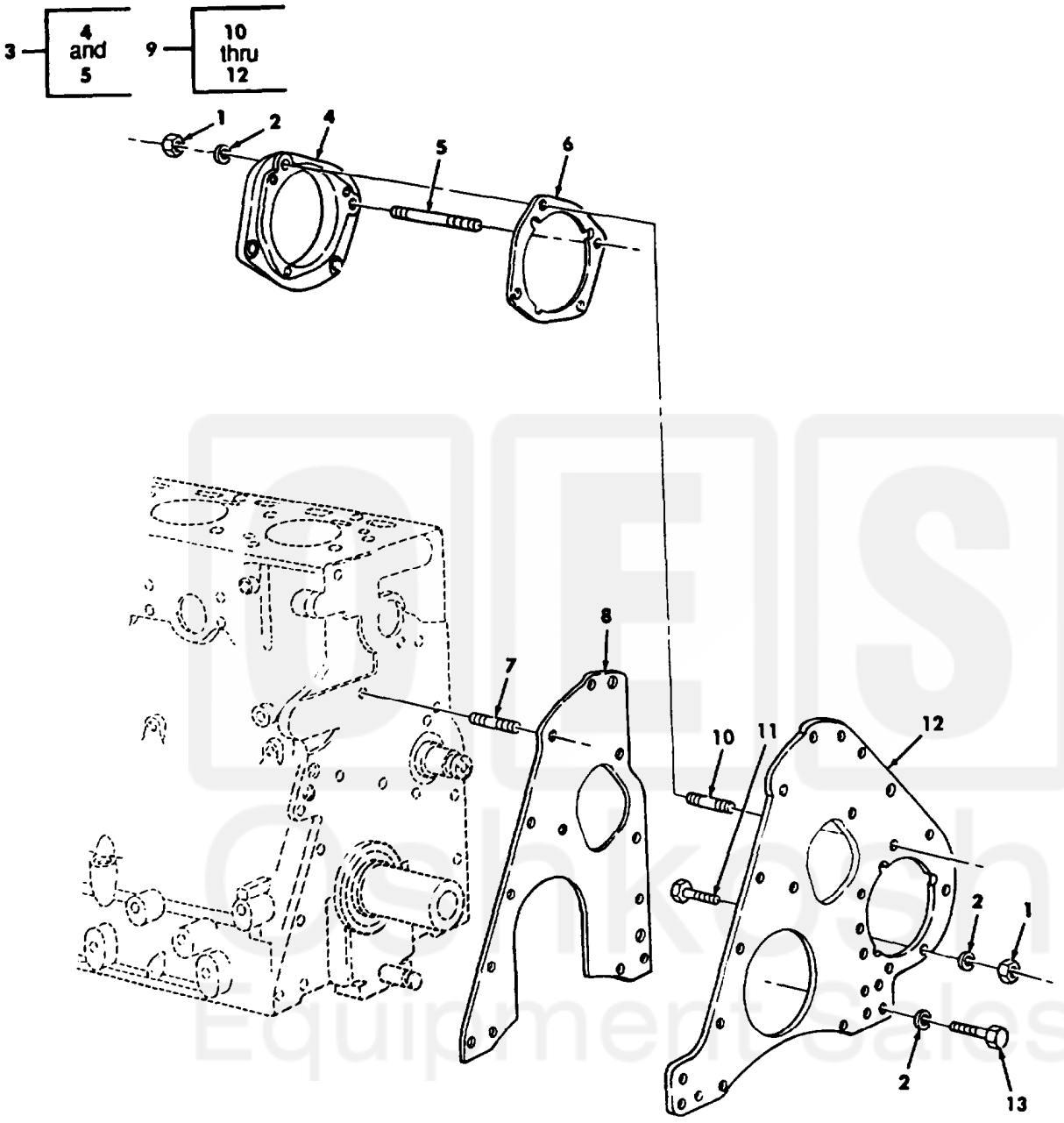

Figure 10. Crankcase, Front Plate, and Related Parts.

Current part is item (6) on diagram. Available at www.oshkoshequipment.com

Current part is item (6) on diagram. Available at www.oshkoshequipment.com

(1) ITEM No	(2) SMR CODE	(3) NSN	(4) CAGEC	(5) PART NUMBER	(6) DESCRIPTION MD USABLE ON CODES (UOC)	(7) QTY
					GROUP 0105 VALVES, CAMSHAFTS, AND TIMING SYSTEM	
					FIG.10 CRANKCASE, FRONT PLATE, AND RELATED PARTS	
1	PAFZZ	5310007320558	96906	MS51967-8	NUT,PLAIN,HEXAGON	4
2	PAFZZ	5310009594675	96906	MS35340-46	WASHER,LOCK	10
3	PAFZZ	2910001793546	19207	10935553	ADAPTER,FUEL PUMP	1
4	PFFZZ	2815004209062	19207	10889776	.ADAPTER,FUEL INJECT	1
5	PAFZZ	5307004439865	19207	10898712	.STUD,PLAIN	2
6	PAFZZ	5330008629064	19207	10889723	GASKET PART OF KIT P/N 57K1319	1
7	PAFZZ	5307009037674	19207	7375681-1	STUD,PLAIN	1
8	KFHZZ		19207	10889737	GASKET PART OF KIT P/N 57K1319	1
9	PFHZZ	2815001361200	19207	10889744-1	PLATE ASSEMBLY, END	1
10	PAFZZ	5307009353695	19207	7376342	.STUD,PLAIN	2
11	PAFZZ	5305013510797	96906	MS90725-73	.SCREW,CAP,HEXAGON H	2
12	PAFZZ	2815001361199	19207	10889739	.COVER,TIMING GEAR,I	1
13	PAFZZ	5305000680510	80204	B1821BH038C100N	SCREW,CAP,HEXAGON H	6

END OF FIGURE

Current part is item (6) on diagram. Available at www.oshkoshequipment.com